LC-R7i
EXERCISE BIKE

R7-0100-01

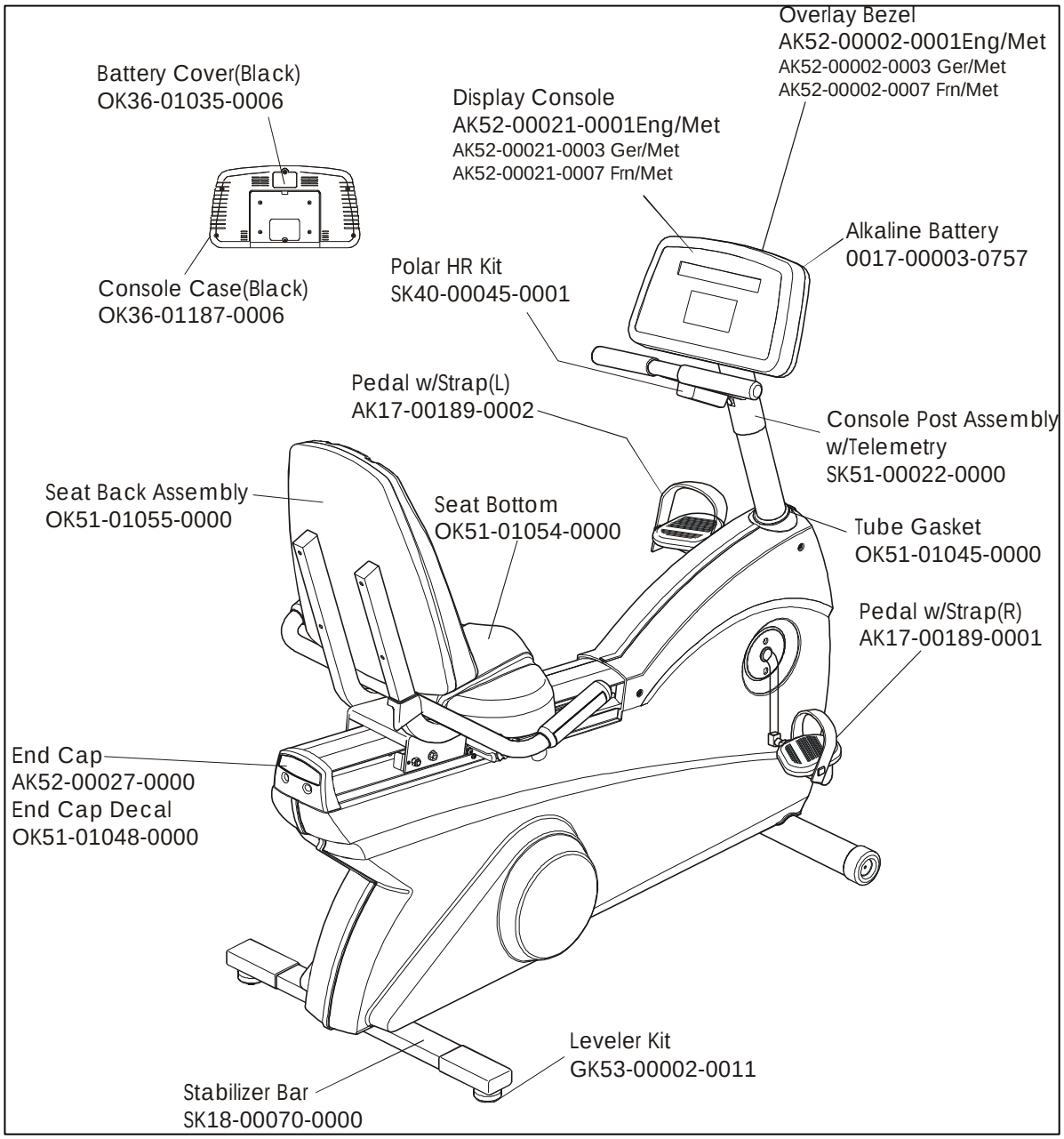

Revision Date: 4/26/00

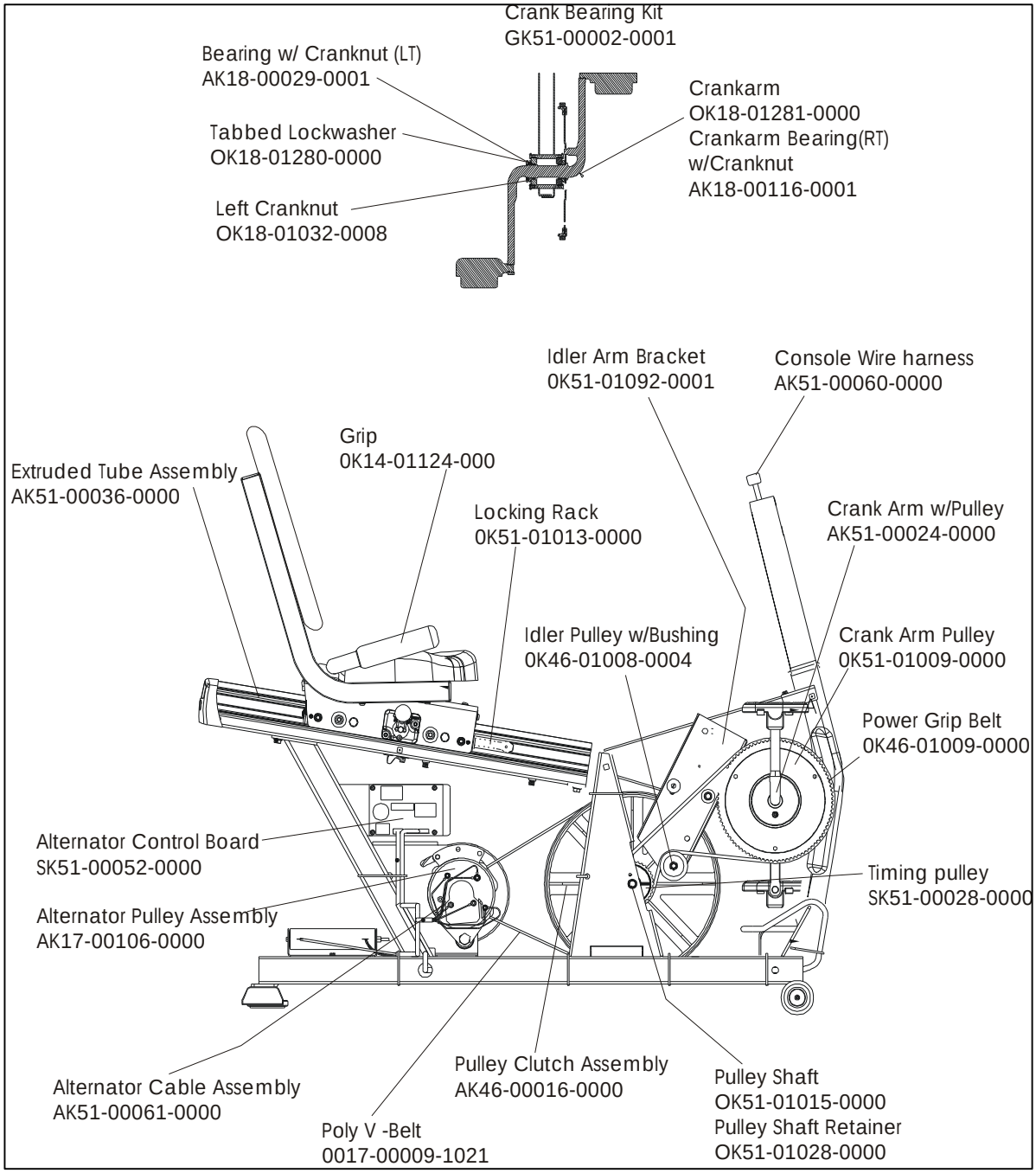
Crank Bearing Kit
GK51-00002-0001
Bearing w/ Cranknut (LT)
AK18-00029-0001
Tabbed Lockwasher
OK18-01280-0000
Left Cranknut
OK18-01032-0008
Crankarm
OK18-01281-0000
Crankarm Bearing(RT)
w/Cranknut
AK18-00116-0001
Idler Arm Bracket
0K51-01092-0001
Console Wire harness
AK51-00060-0000
Grip
0K14-01124-000
Extruded Tube Assembly
AK51-00036-0000
Locking Rack
0K51-01013-0000
Crank Arm w/Pulley
AK51-00024-0000
Idler Pulley w/Bushing
0K46-01008-0004
Crank Arm Pulley
0K51-01009-0000
Power Grip Belt
0K46-01009-0000
Alternator Control Board
SK51-00052-0000
Timing pulley
SK51-00028-0000
Alternator Pulley Assembly
AK17-00106-0000
Alternator Cable Assembly
AK51-00061-0000
Pulley Clutch Assembly
AK46-00016-0000
Pulley Shaft
OK51-01015-0000
Pulley Shaft Retainer
OK51-01028-0000
Poly V -Belt
0017-00009-1021

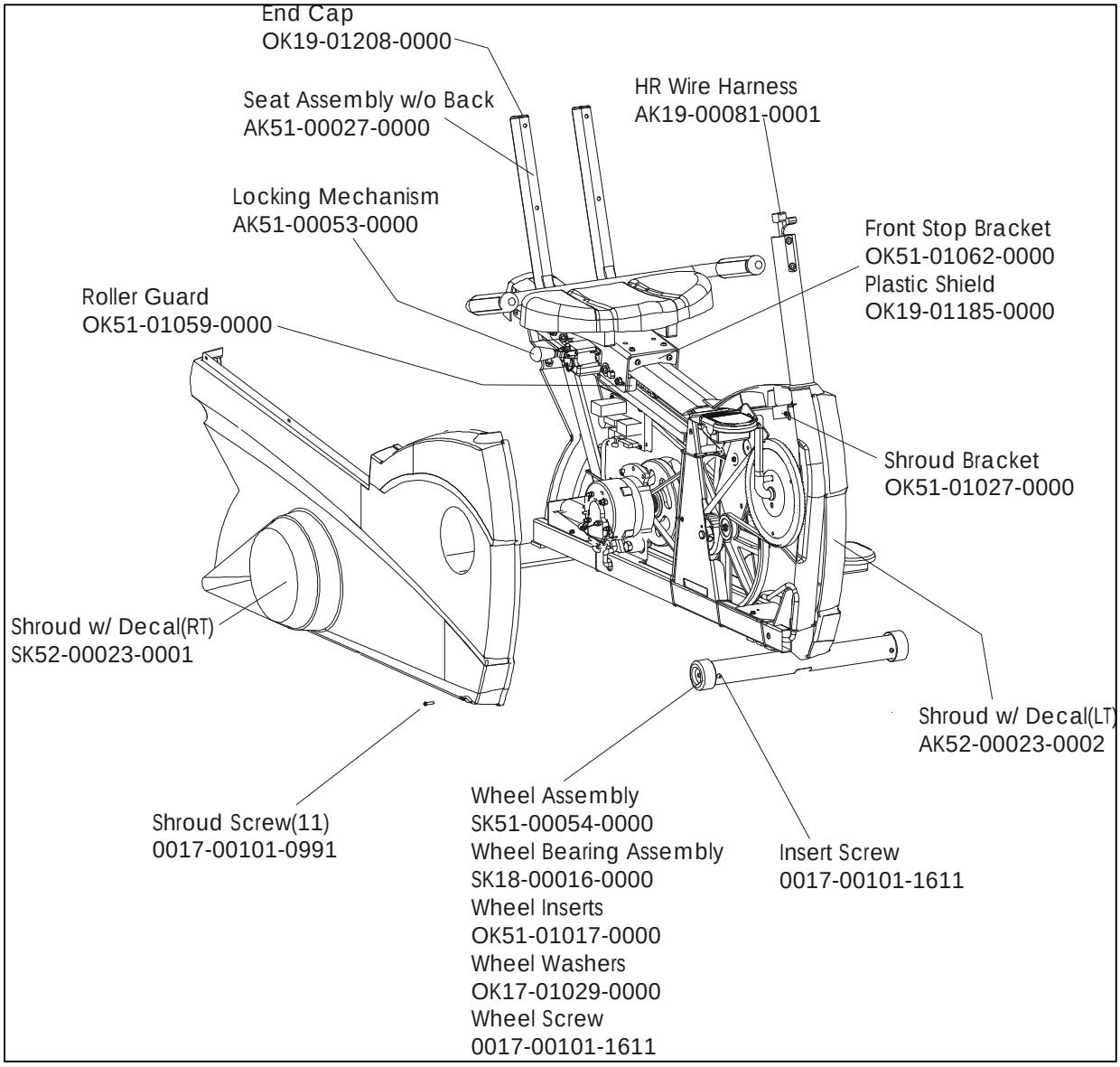
End Cap
OK19-01208-0000
Seat Assembly w/o Back
AK51-00027-0000
HR Wire Harness
AK19-00081-0001
Locking Mechanism
AK51-00053-0000
Front Stop Bracket
OK51-01062-0000
Plastic Shield
OK19-01185-0000
Roller Guard
OK51-01059-0000
Shroud Bracket
OK51-01027-0000
Shroud w/ Decal(RT)
SK52-00023-0001
Shroud w/ Decal(LT)
AK52-00023-0002
Shroud Screw(11)
0017-00101-0991
Wheel Assembly
SK51-00054-0000
Wheel Bearing Assembly
SK18-00016-0000
Wheel Inserts
OK51-01017-0000
Wheel Washers
OK17-01029-0000
Wheel Screw
0017-00101-1611
Insert Screw
0017-00101-1611